ProLight PK2B-2KJE-B
2W Infrared 850 Power LED
Technical Datasheet
Version: 1.0

ProLight Opto PK2B Series

Features

- Viewing angle: 80˚
- Instant light (less than 100ns)
- Lead free reflow soldering
- RoHS compliant
- Cool beam, safe to the touch
- Superior ESD protection

Main Applications

- Surveillance
- Gesture recognition
- In-cabin automotive device

Introduction

·ProLight PK2B-2KJE-viewing angle 80°, is one of the smallest high power LED footprint available by ProLight Opto, has offered extended solid-state lighting design possibilities. ProLight PK2B-2KJE-viewing angle 80° is designed with ProLight own Patents and using copper leadframe, the best thermal material of the world.

·PK2B-2KJE-viewing angle 80°qualifies as the JEDEC Level 1 MSL sensitivity level and suitable for SMD process, Pb_free reflow soldering capability, and full compliance with EU Reduction of Hazardous Substances (RoHS) legislation.

Emitter Mechanical Dimensions

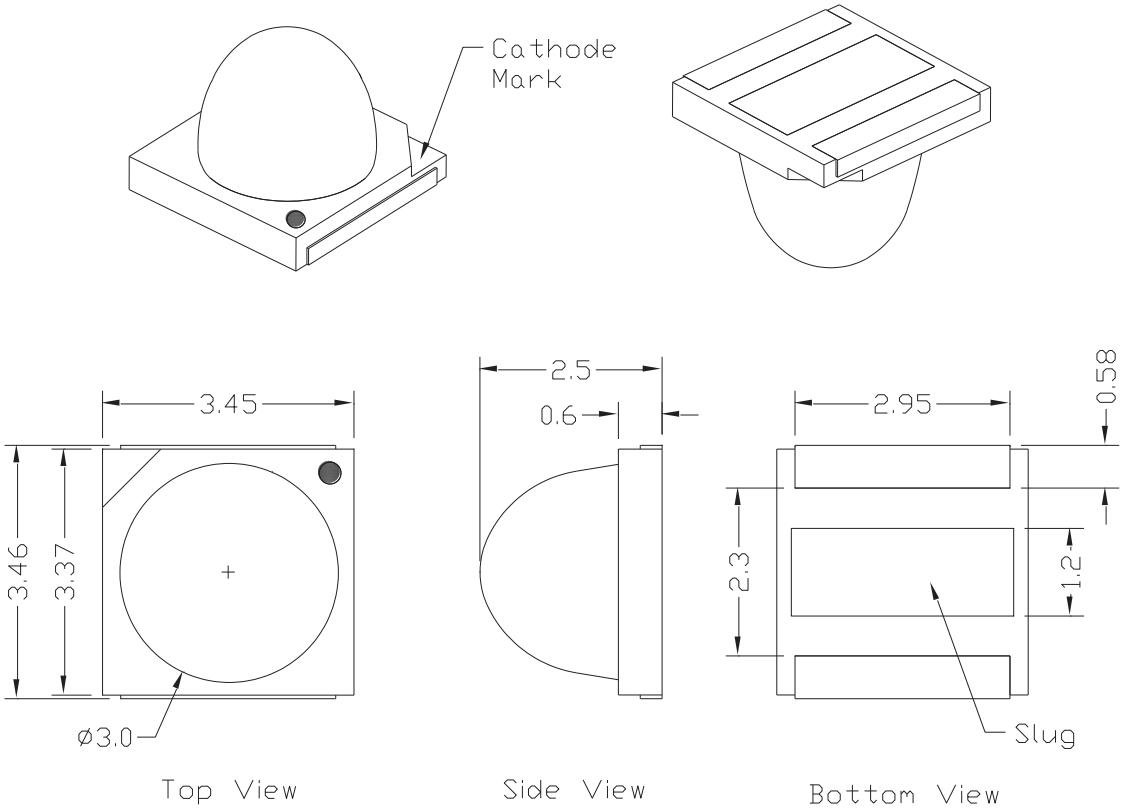

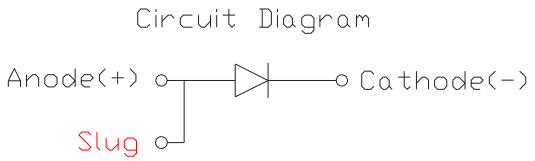

Notes:
1. The cathode side of the device is denoted by the chamfer on the part body.
2. Electrical insulation between the case and the board is required. Do not electrically connect either the anode or cathode to the slug.
3. Drawing not to scale.
4. All dimensions are in millimeters.
5. Unless otherwise indicated, tolerances are ± 0.1mm.
6. Please do not solder the emitter by manual hand soldering, otherwise it will damage the emitter.
7. **Please do not use a force of over 0.3kgf impact or pressure on the lens of the LED, otherwise it will cause a catastrophic failure.**

*The appearance and specifications of the product may be modified for improvement without notice.

Flux Characteristics, T_J = 25˚C

Part Number Emitter	Radiant Intensity I_e (mW/sr) @700mA		Radiometric Power (mW)	
			Refer @700mA	Refer @350mA
	Min.	Typ.	Typ.	Typ.
PK2B-2KJE-B	200	300	500	280

- ProLight maintains a tolerance of ± 7% on flux and power measurements.
- Please do not drive at rated current more than 1 second without proper heat sink.

Electrical Characteristics at 700mA, T_J = 25˚C

Color	Forward Voltage V_F (V)			Thermal Resistance Junction to Slug (˚C/ W)
	Min.	Typ.	Max.	
Infrared 850	1.4	1.6	2.1	8

- ProLight maintains a tolerance of ± 0.1V for Voltage measurements.

Optical Characteristics at 700mA, T_J = 25˚C

Color	Peak Wavelength λ_P			Viewing Angle (FWHM, degrees)
	Min.	Typ.	Max.	Typ.
Infrared 850	840 nm	855 nm	870 nm	80

- ProLight maintains a tolerance of ± 1nm for peak wavelength measurements.

Absolute Maximum Ratings

Parameter	Infrared 850
DC Forward Current (mA)	700
Peak Pulsed Forward Current (mA)	1000 (less than 1/10 duty cycle@1KHz)
ESD Sensitivity (HBM per MIL-STD-883E Method 3015.7)	±4000V (Class III)
LED Junction Temperature	120˚C
Operating Temperature	-40˚C - 110˚C
Storage Temperature	-40˚C - 120˚C
Soldering Temperature	JEDEC 020c 260˚C
Allowable Reflow Cycles	3
Reverse Voltage	Not designed to be driven in reverse bias

Radiometric Power Bin Structure at 700mA

Color	Bin Code	Minimum Radiant Intensity I_e (mW/sr)	Maximum Radiant Intensity I_e (mW/sr)	Available Color Bins
Infrared 850	D	200	250	All
	E	250	320	【1】
	F	320	400	【1】

- ProLight maintains a tolerance of ± 7% on flux and power measurements.
- The flux bin of the product may be modified for improvement without notice.
- 【1】 The rest of color bins are not 100% ready for order currently. Please ask for quote and order possibility.

Peak Wavelength Bin Structure at 700mA

Color	Bin Code	Minimum Peak Wavelength (nm)	Maximum Peak Wavelength (nm)
Infrared 850	1	840	870

- ProLight maintains a tolerance of ± 1nm for peak wavelength measurements.

Color Spectrum, T_J = 25˚C

1. Infrared 850

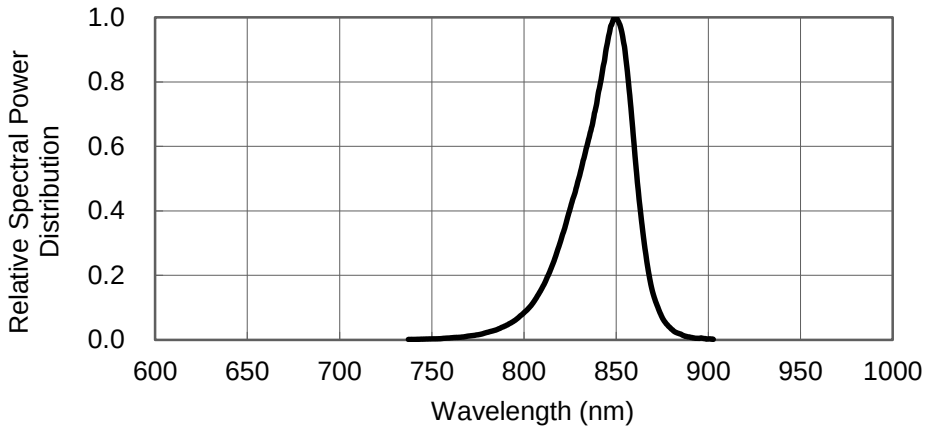

Light Output Characteristics

Relative Light Output vs. Junction Temperature at 700mA

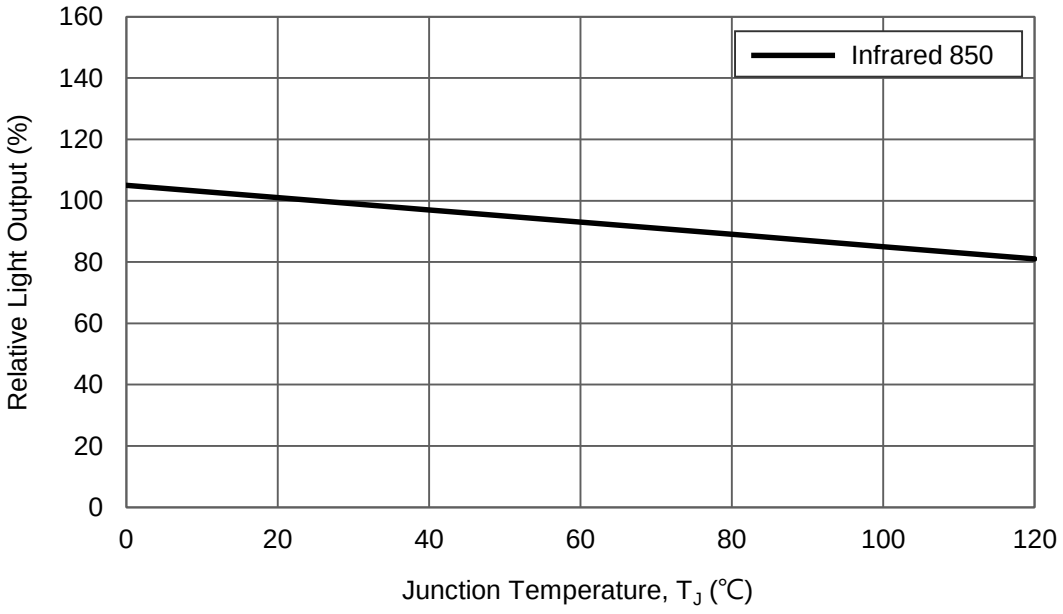

Forward Current Characteristics, T_J = 25˚C

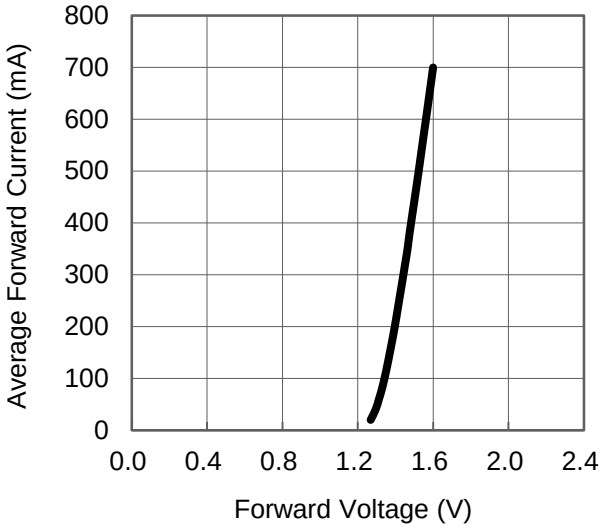

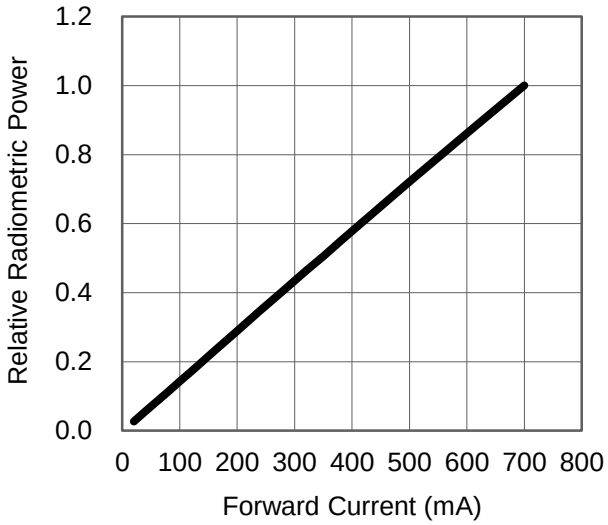

Slug Temperature vs. Maximum Forward Current

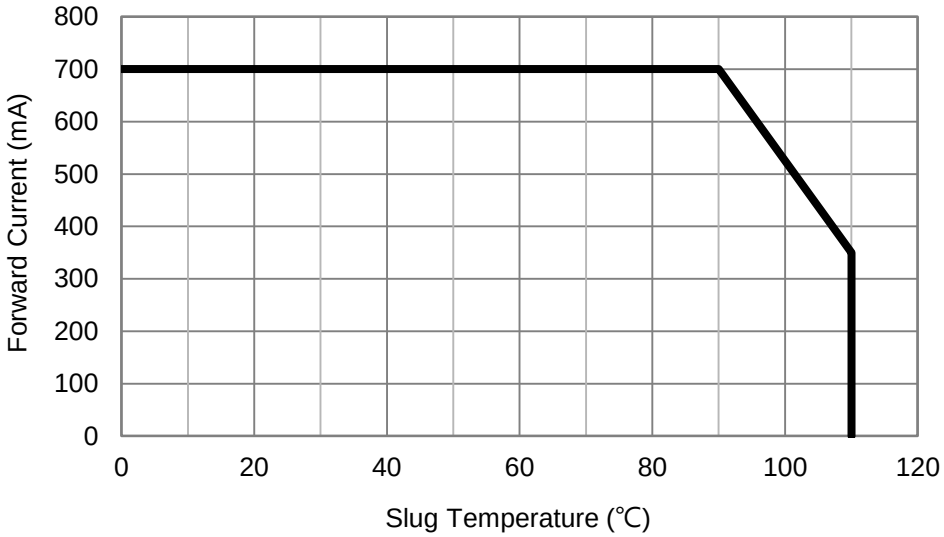

Typical Representative Spatial Radiation Pattern

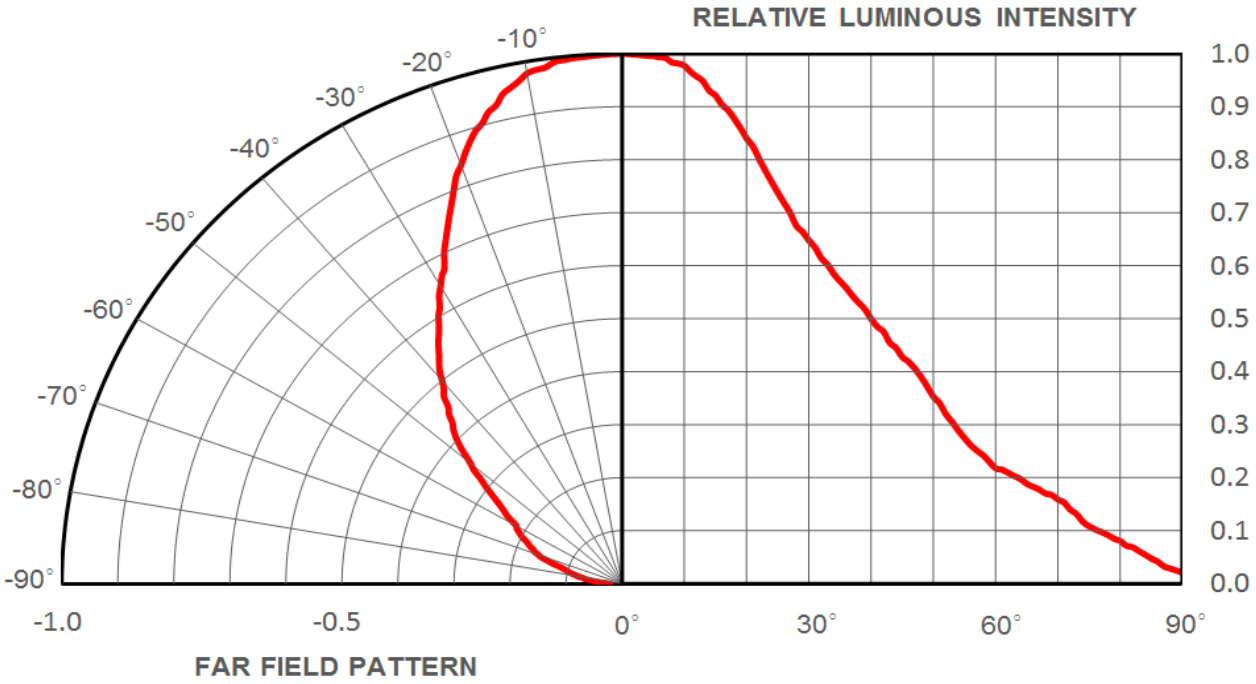

Qualification Reliability Testing

Stress Test	Stress Conditions	Stress Duration	Failure Criteria
Room Temperature Operating Life (RTOL)	25°C, I_F = max DC (Note 1)	1000 hours	Note 2
Wet High Temperature Operating Life (WHTOL)	85°C/60%RH, I_F = max DC (Note 1)	1000 hours	Note 2
Wet High Temperature Storage Life (WHTSL)	85°C/85%RH, non-operating	1000 hours	Note 2
High Temperature Storage Life (HTSL)	110°C, non-operating	1000 hours	Note 2
Low Temperature Storage Life (LTSL)	-40°C, non-operating	1000 hours	Note 2
Non-operating Temperature Cycle (TMCL)	-40°C to 120°C, 30 min. dwell, <5 min. transfer	200 cycles	Note 2
Mechanical Shock	1500 G, 0.5 msec. pulse, 5 shocks each 6 axis		Note 3
Natural Drop	On concrete from 1.2 m, 3X		Note 3
Variable Vibration Frequency	10-2000-10 Hz, log or linear sweep rate, 20 G about 1 min., 1.5 mm, 3X/axis		Note 3
Solder Heat Resistance (SHR)	260°C ± 5°C, 10 sec.		Note 3
Solderability	Steam age for 16 hrs., then solder dip at 260°C for 5 sec.		Solder coverage on lead

Notes:
1. Depending on the maximum derating curve.
2. Criteria for judging failure

Item	Test Condition	Criteria for Judgement	
		Min.	Max.
Forward Voltage (V_F)	I_F = max DC	--	Initial Level x 1.1
Luminous Flux or Radiometric Power (Φ_V)	I_F = max DC	Initial Level x 0.7	--

* The test is performed after the LED is cooled down to the room temperature.

3. A failure is an LED that is open or shorted.

Recommended Solder Pad Design

Standard Emitter

TYPE A.

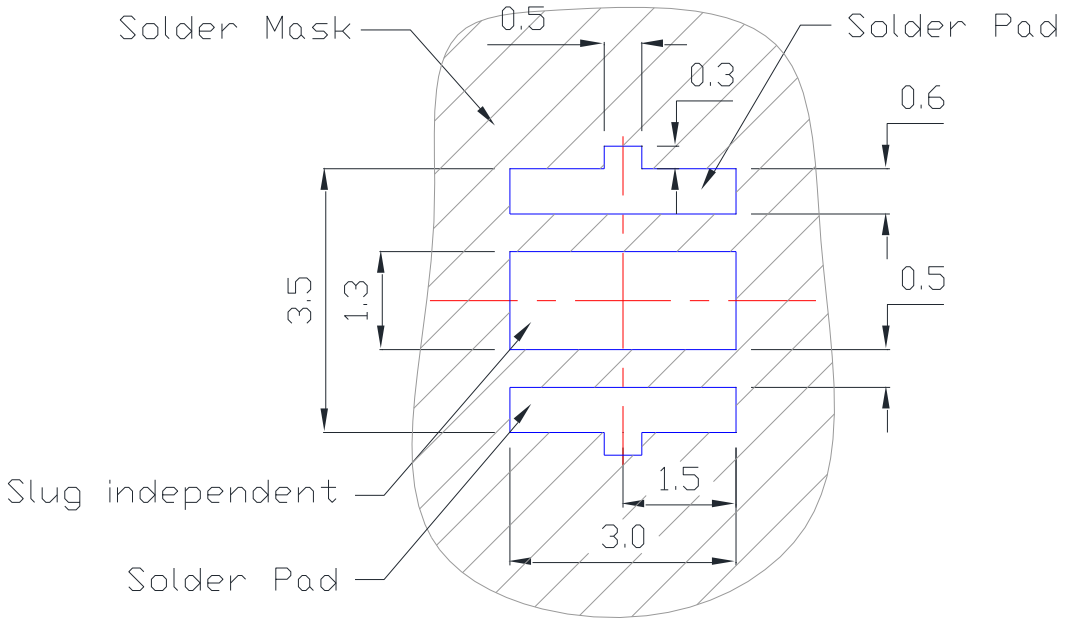

TYPE B.

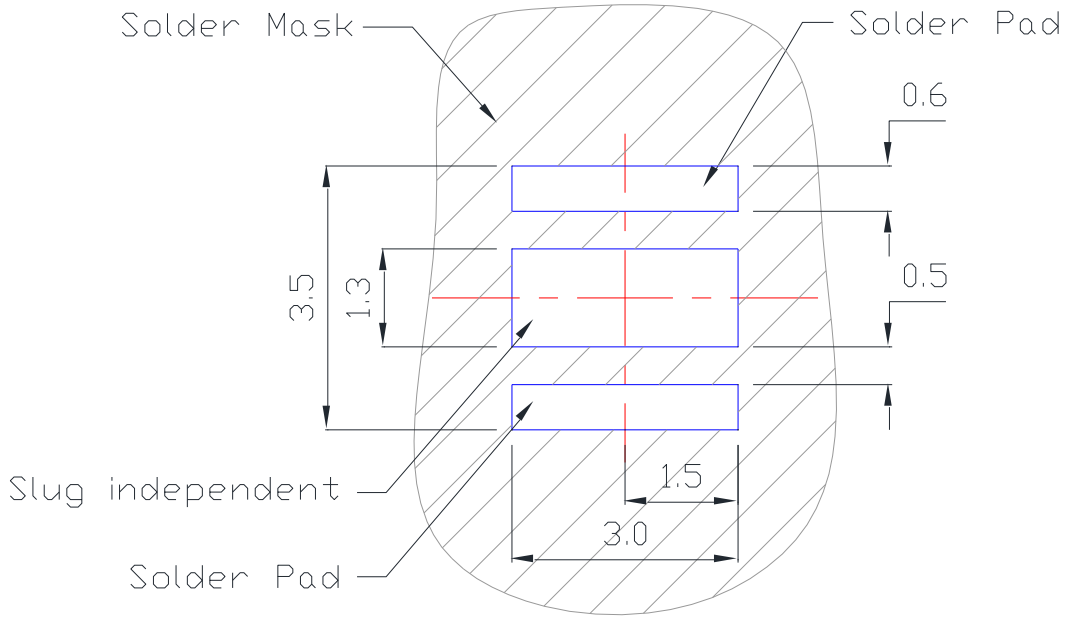

- All dimensions are in millimeters.
- Electrical isolation is required between Slug and Solder Pad.

Reflow Soldering Condition

Profile Feature	Sn-Pb Eutectic Assembly	Pb-Free Assembly
Average Ramp-Up Rate (T_{Smax} to T_P)	3°C / second max.	3°C / second max.
Preheat – Temperature Min (T_{Smin}) – Temperature Max (T_{Smax}) – Time (t_{Smin} to t_{Smax})	100°C 150°C 60-120 seconds	150°C 200°C 60-180 seconds
Time maintained above: – Temperature (T_L) – Time (t_L)	183°C 60-150 seconds	217°C 60-150 seconds
Peak/Classification Temperature (T_P)	240°C	260°C
Time Within 5°C of Actual Peak Temperature (t_P)	10-30 seconds	20-40 seconds
Ramp-Down Rate	6°C/second max.	6°C/second max.
Time 25°C to Peak Temperature	6 minutes max.	8 minutes max.

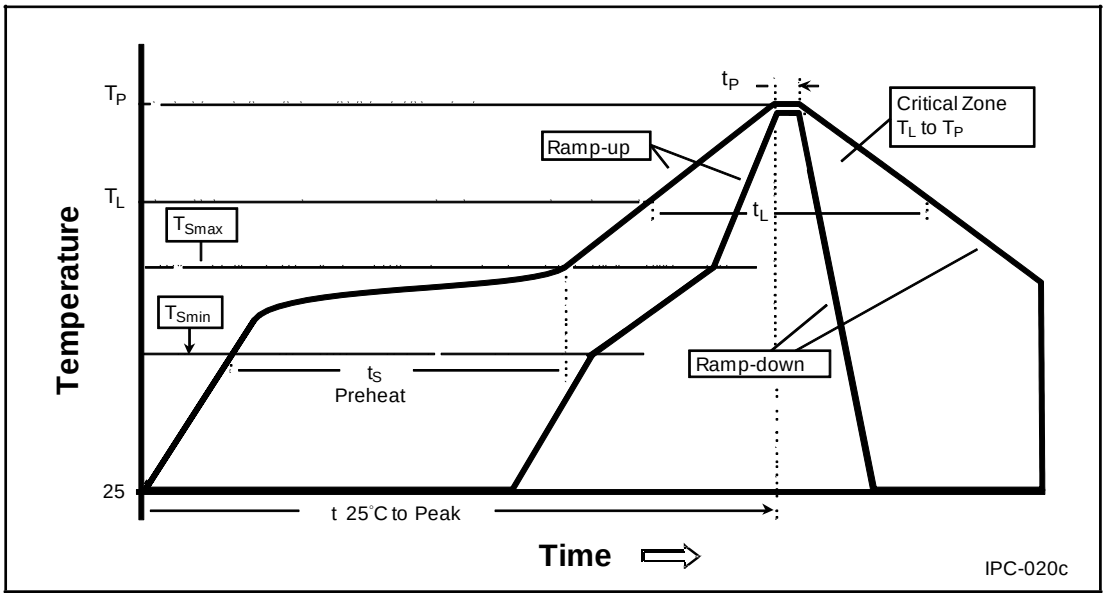

- **We recommend using the M705-S101-S4 solder paste from SMIC (Senju Metal Industry Co., Ltd.) for lead-free soldering.**
- **Do not use solder pastes with post reflow flux residue>47%. (58Bi-42Sn eutectic alloy, etc) This kind of solder pastes may cause a reliability problem to LED.**
- All temperatures refer to topside of the package, measured on the package body surface.
- Repairing should not be done after the LEDs have been soldered. When repairing is unavoidable, a double-head soldering iron should be used. It should be confirmed beforehand whether the characteristics of the LEDs will or will not be damaged by repairing.
- Reflow soldering should not be done more than three times.
- When soldering, do not put stress on the LEDs during heating.
- After soldering, do not warp the circuit board.

Emitter Reel Packaging

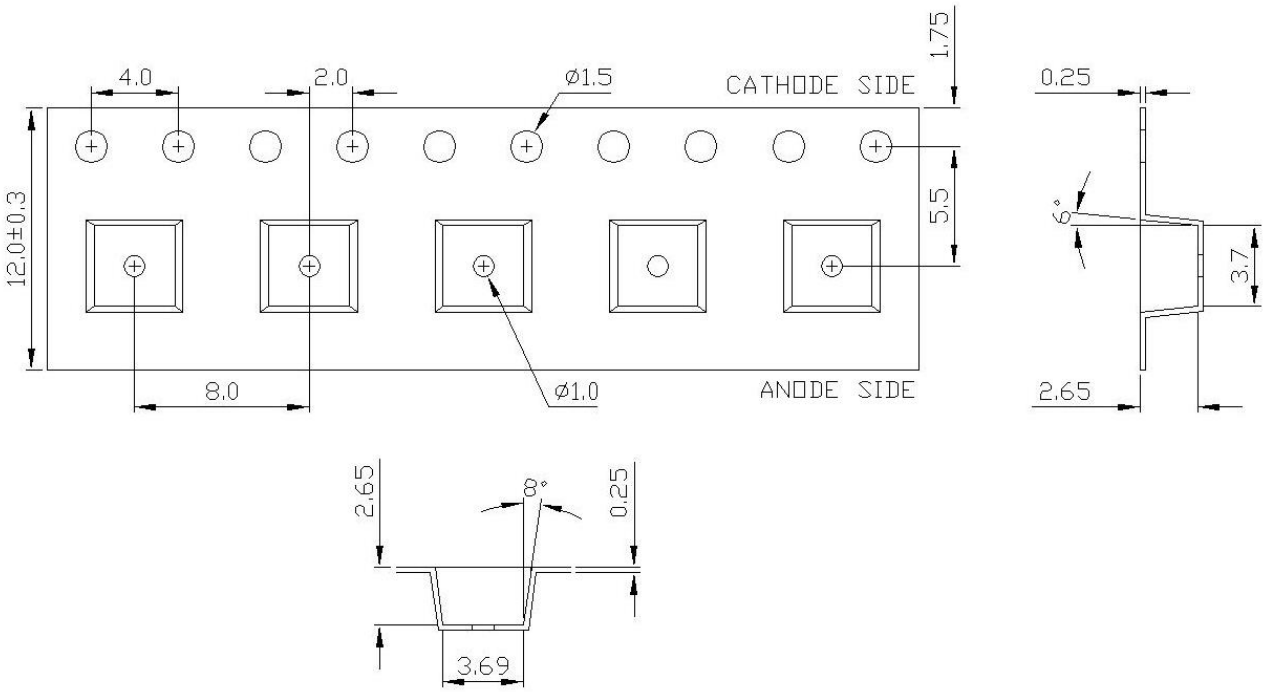

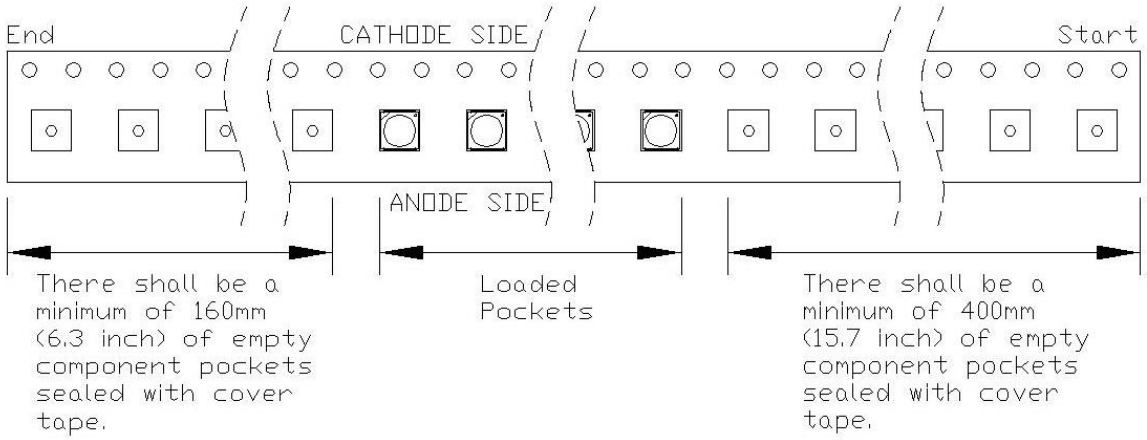

Notes:
1. Drawing not to scale.
2. All dimensions are in millimeters.
3. Unless otherwise indicated, tolerances are ± 0.1mm.

Emitter Reel Packaging

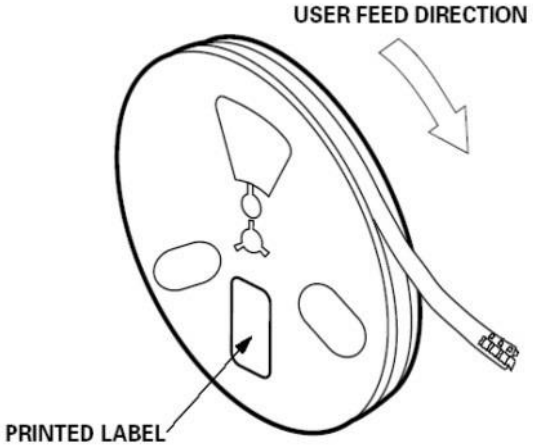

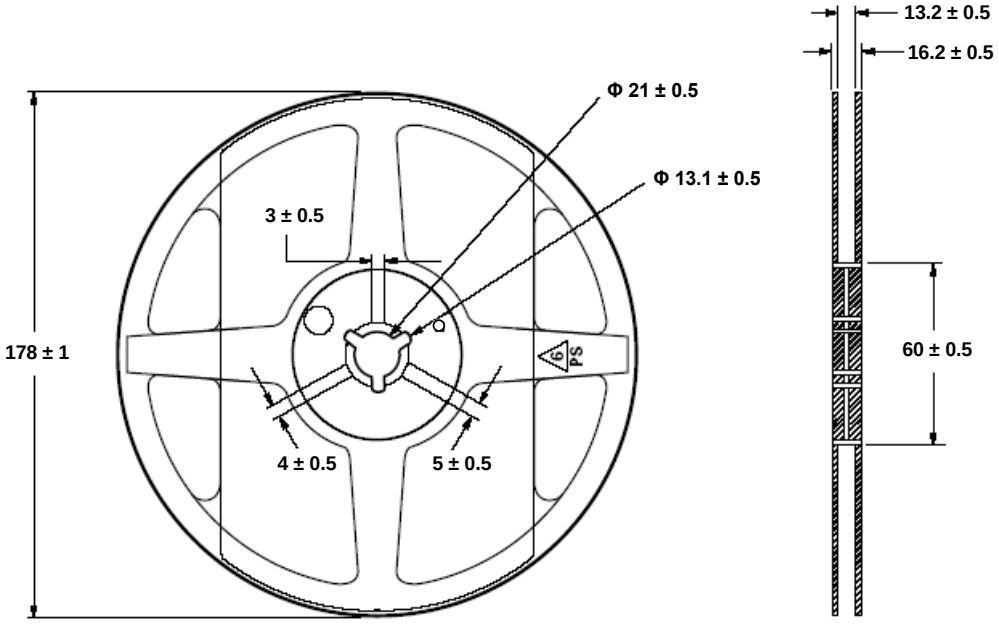

Notes:
1. Empty component pockets sealed with top cover tape.
2. 500 pieces per reel.
3. Drawing not to scale.
4. All dimensions are in millimeters.

Precaution for Use

- Storage
  Please do not open the moisture barrier bag (MBB) more than one week. This may cause the leads of LED discoloration. We recommend storing ProLight's LEDs in a dry box after opening the MBB. The recommended storage conditions are temperature 5 to 30˚C and humidity less than 40% RH. It is also recommended to return the LEDs to the MBB and to reseal the MBB.
- The slug is is not electrically neutral. Therefore, we recommend to isolate the heat sink.
- **We recommend using the M705-S101-S4 solder paste from SMIC (Senju Metal Industry Co., Ltd.) for lead-free soldering.**
- **Do not use solder pastes with post reflow flux residue>47%. (58Bi-42Sn eutectic alloy, etc) This kind of solder pastes may cause a reliability problem to LED.**
- Any mechanical force or any excess vibration shall not be accepted to apply during cooling process to normal temperature after soldering.
- Please avoid rapid cooling after soldering.
- Components should not be mounted on warped direction of PCB.
- Repairing should not be done after the LEDs have been soldered. When repairing is unavoidable, a heat plate should be used. It should be confirmed beforehand whether the characteristics of the LEDs will or will not be damaged by repairing.
- This device should not be used in any type of fluid such as water, oil, organic solvent and etc. When cleaning is required, isopropyl alcohol should be used.
- When the LEDs are illuminating, operating current should be decide after considering the package maximum temperature.
- The appearance, specifications and flux bin of the product may be modified for improvement without notice. Please refer to the below website for the latest datasheets.
  http://www.prolightopto.com/

Handling of Silicone Lens LEDs

Notes for handling of silicone lens LEDs

- Please do not use a force of over 0.3kgf impact or pressure on the silicone lens, otherwise it will cause a catastrophic failure.
- The LEDs should only be picked up by making contact with the sides of the LED body.
- Avoid touching the silicone lens especially by sharp tools such as Tweezers.
- Avoid leaving fingerprints on the silicone lens.
- Please store the LEDs away from dusty areas or seal the product against dust.
- When populating boards in SMT production, there are basically no restrictions regarding the form of the pick and place nozzle, except that mechanical pressure on the silicone lens must be prevented.
- Please do not mold over the silicone lens with another resin. (epoxy, urethane, etc)

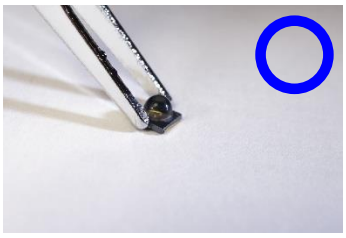

Disclaimers

ProLightopto Technology has made every reasonable effort to ensure the accuracy of the information in this datasheet. However, it should be understood that this information is for guidance only and does not constitute any offer or part of a contract.

ProLightopto Technology does not guarantee or accept any legal liability for the accuracy, completeness, or usefulness of any information, product, technology, or process disclosed in this datasheet.
The company reserves the right to make changes or improvements to this datasheet at its discretion.

Unless this datasheet is incorporated into a formal contract, customers should not rely on the information as a binding commitment to any specifications or product parameters by ProLightopto Technology. Customers are advised to verify that the information is current and complete before entering into any contract or acknowledging any purchase order. Therefore, all products described herein are subject to ProLightopto Technology's terms and conditions at the time of order acknowledgment.

Unless agreed upon by contractual agreement, not all parameters of each product are necessarily tested. ProLightopto Technology does not warrant or grant any license, either expressed or implied, under its patent rights or the rights of others.

Reproduction of the information contained herein is permitted only if done without any modifications or alterations. Altering this information and reproducing it is considered an unfair and deceptive business practice. ProLightopto Technology is not responsible or liable for any such altered documentation.

Reselling ProLightopto Technology's products with statements that differ from or exceed the parameters specified by ProLightopto Technology voids all express or implied warranties for the associated product or service and is considered an unfair and deceptive business practice. ProLightopto Technology is not responsible or liable for any such statements.

ProLightopto Technology's products are not authorized for use as critical components in life support devices or systems without explicit written approval from ProLightopto Technology.

For the purposes of this disclaimer：

1. Life support devices or systems are defined as those intended for surgical implant into the body or those that support or sustain life. Their failure, when used according to instructions for use provided in the labeling, can reasonably be expected to result in significant injury to the user.

2. A critical component is any component of a life support device or system whose failure can reasonably be expected to cause the failure of the device or system, or to affect its safety or effectiveness.